DO NOT SCALE

THIRD ANGLE PROJECTION

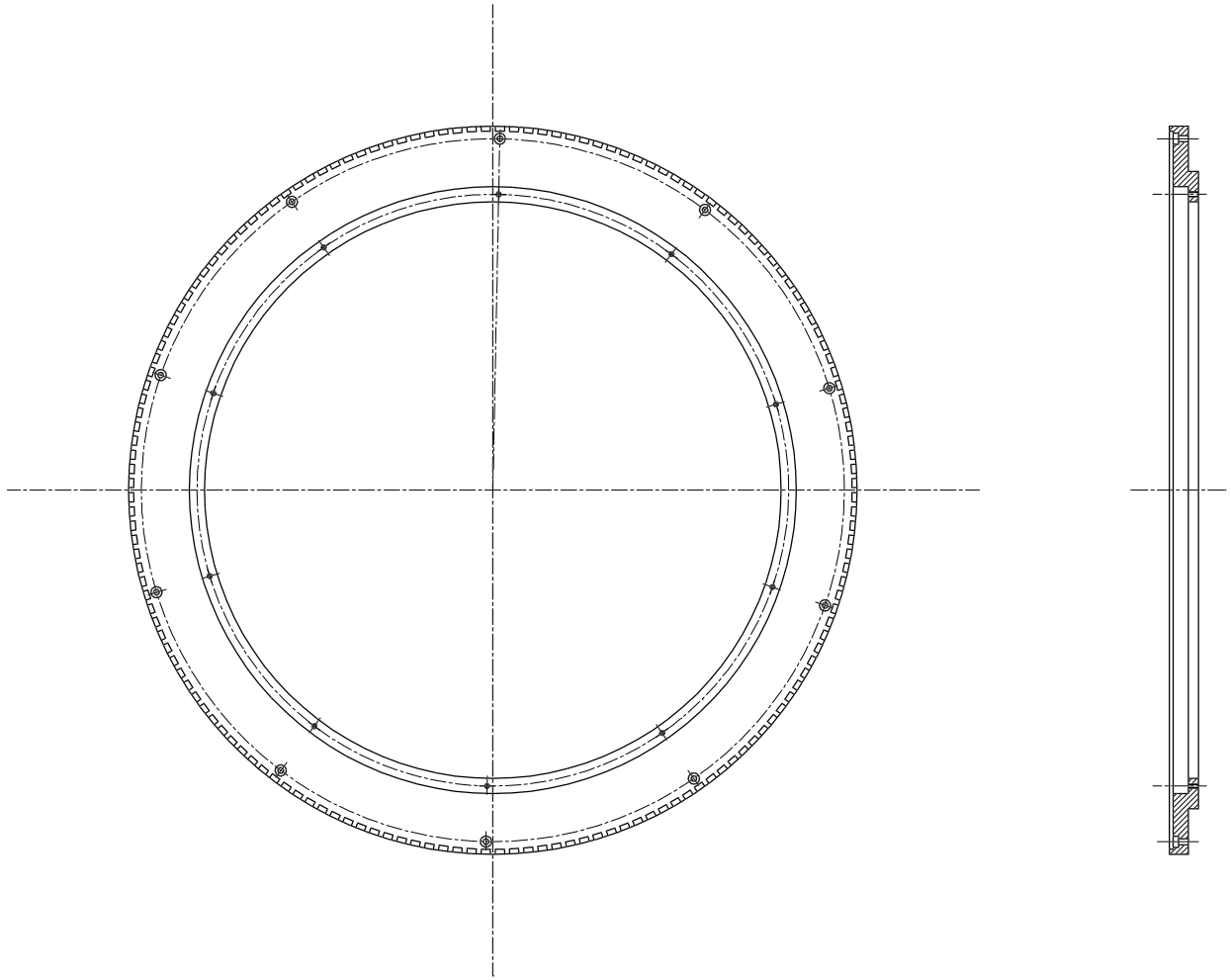

| ISSUE | REVISION | DRN | DATE | ISSUE | REVISION | DRN | DATE |
|---|---|---|---|---|---|---|---|
| | | | | | | | |
| | | | | | | | |
| | | | | | | | |
| | | | | | | | |

ALL DIMENSIONS IN MM UNLESS OTHERWISE STATED

IMPLIED TOLERANCES
X (OVER 100) ±0.20
X (UP TO 100) ±0.1
X.X ±0.10
X.XX ±0.05

Material: MILD STEET

Quantity: 1 OFF

DRG. TITLE: FIELD PLATE – OUTER

SCALES: 1:1.5

DRG.TYPE: PARTS

DRAWN BY: G.D

DATE 10/01/92

ASTRONOMICAL INSTRUMENTATION GROUP
DURHAM UNIVERSITY, PHYSICS DEPARTMENT
SCIENCE LABS, SOUTH ROAD, DURHAM, DH1 3LE
TEL. (091) 374 2107 & 2108

THIS DRAWING IS THE PROPERTY OF THE ASTRONOMICAL INSTRUMENTATION GROUP, DURHAM UNIVERSITY, PHYSICS DEPT. IT MUST NOT BE COPIED OR LENT WITHOUT THE CONSENT OF THE INSTRUMENTATION GROUP

DRG. SIZE A2

DRAWING No. AF2\FM-04

REV. A

DO NOT SCALE

THIRD ANGLE PROJECTION

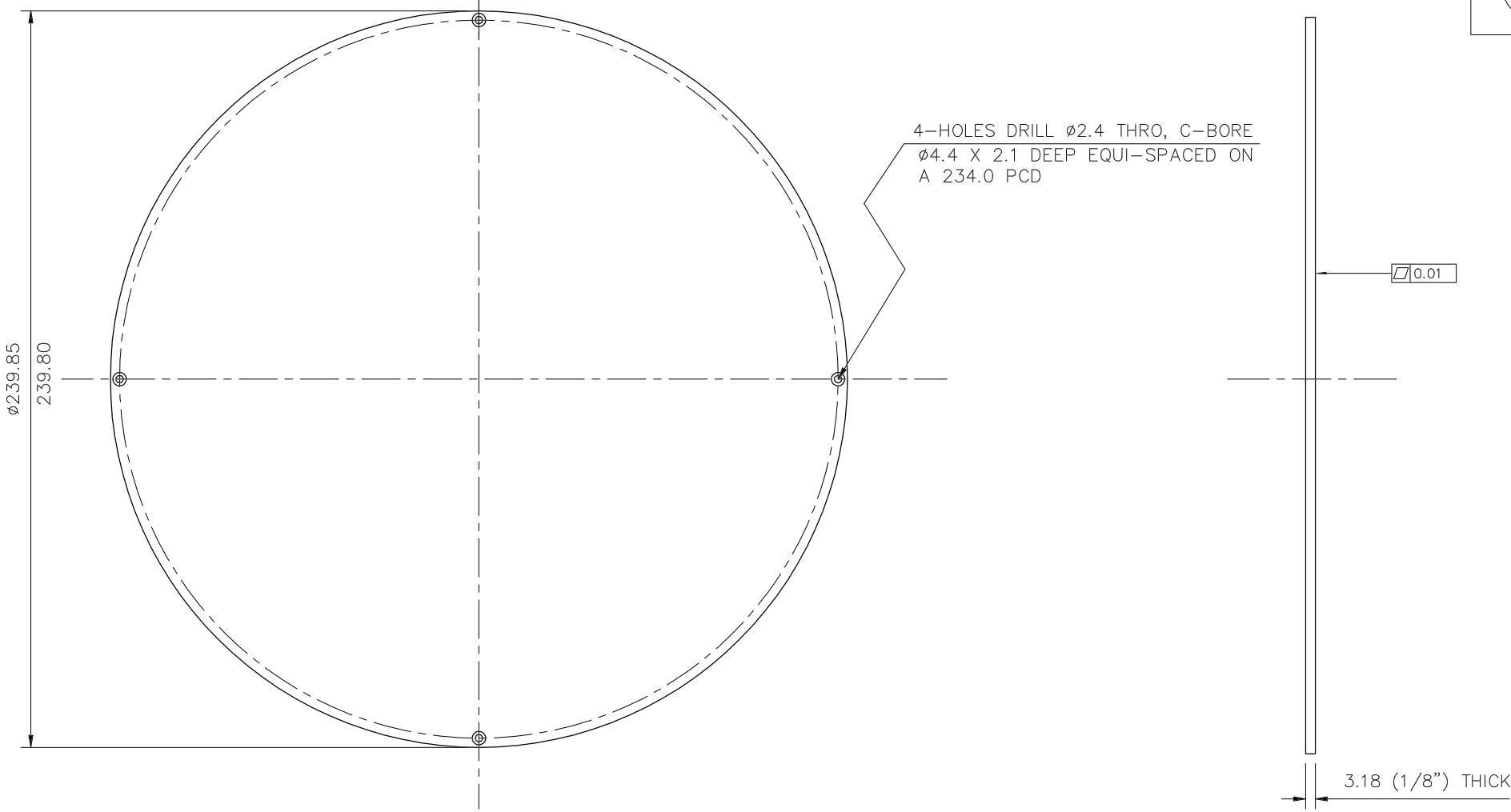


MATERIAL – 1/8" (3.175) THICK GROUND
FLAT STOCK BS4659:1971 B01
MATT BLACK FINISH

| ISSUE | REVISION | DRN | DATE | ISSUE | REVISION | DRN | DATE |
|---|---|---|---|---|---|---|---|
| | | | | | | | |
| | | | | | | | |
| | | | | | | | |
| | | | | | | | |

ALL DIMENSIONS IN MM UNLESS OTHERWISE STATED

IMPLIED TOLERANCES
X (OVER 100) ±0.20
X (UP TO 100) ±0.1
X.X ±0.10
X.XX ±0.05

Material: GAUGE PLATE

Quantity: 1 OFF

DRG. TITLE: FIELD PLATE

SCALES: 1:1

DRG.TYPE: PARTS

DRAWN BY: G.D

DATE 16/1/92

ASTRONOMICAL INSTRUMENTATION GROUP
DURHAM UNIVERSITY, PHYSICS DEPARTMENT
SCIENCE LABS, SOUTH ROAD, DURHAM, DH1 3LE
TEL. (091) 374 2107 & 2108

THIS DRAWING IS THE PROPERTY OF THE ASTRONOMICAL INSTRUMENTATION GROUP, DURHAM UNIVERSITY, PHYSICS DEPT. IT MUST NOT BE COPIED OR LENT WITHOUT THE CONSENT OF THE INSTRUMENTATION GROUP

DRG. SIZE A2

DRAWING No. AF2\FM–03

REV. A