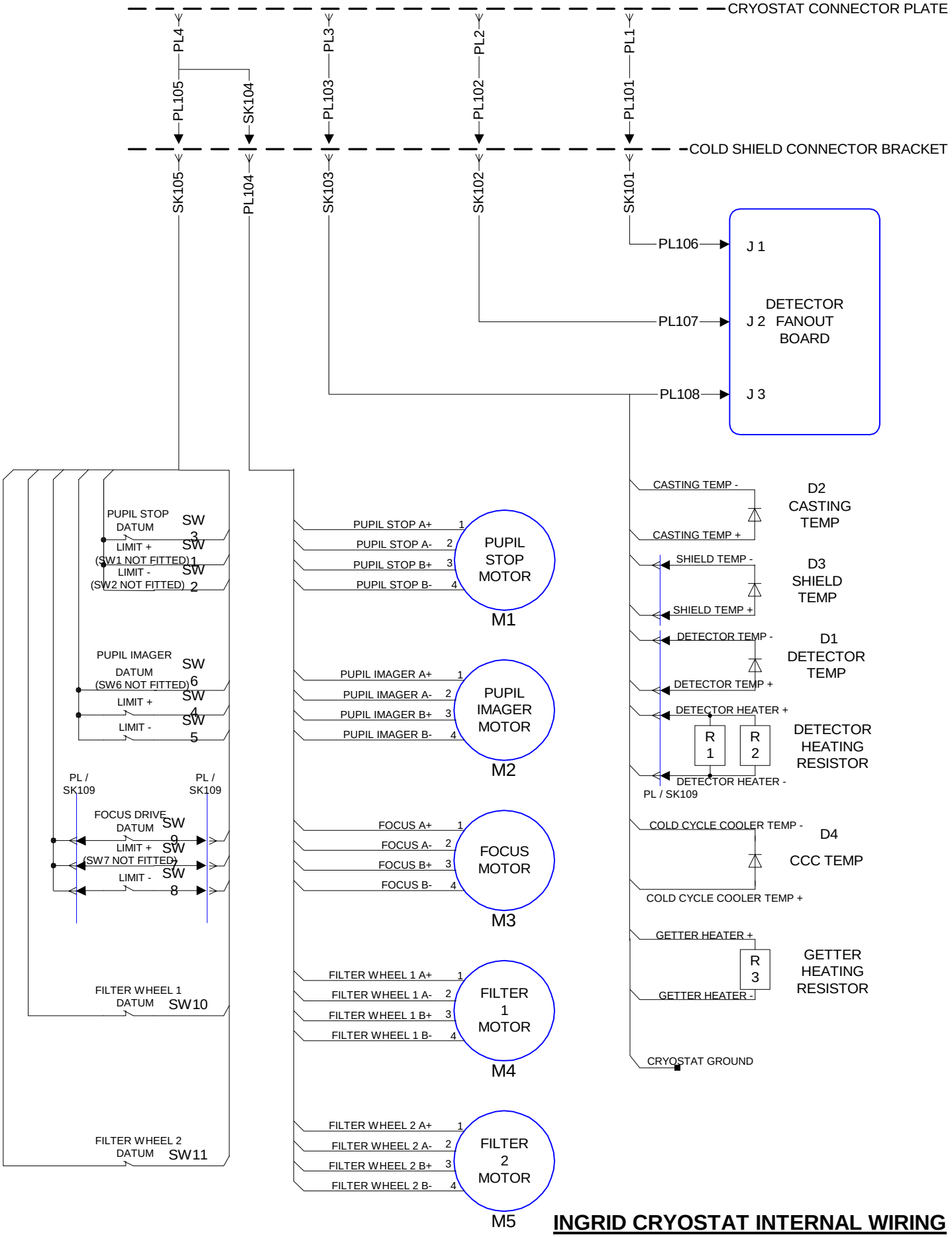

INGRID CRYOSTAT INTERNAL WIRING