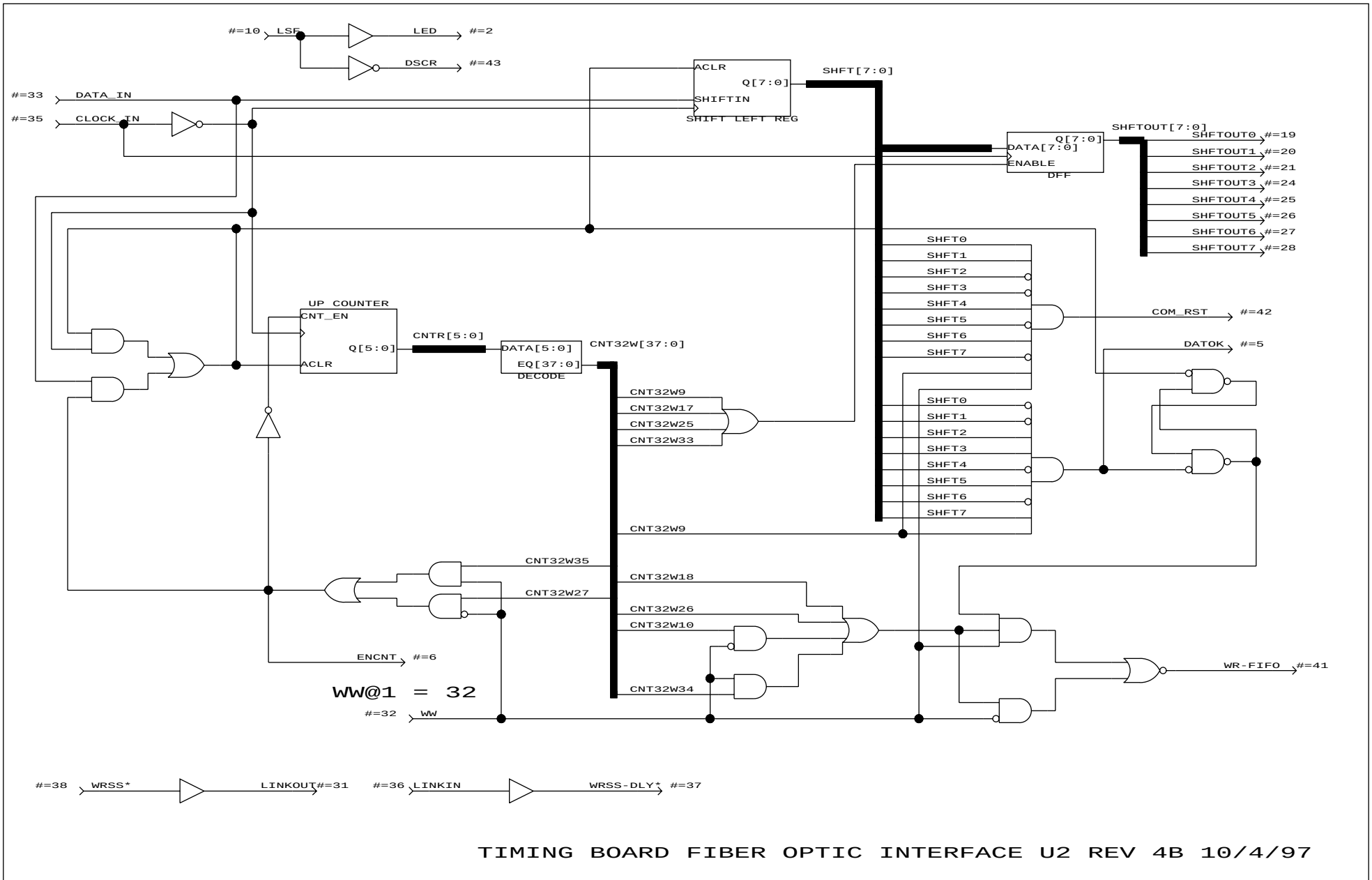

TIMING BOARD FIBER OPTIC INTERFACE U2 REV 4B 10/4/97