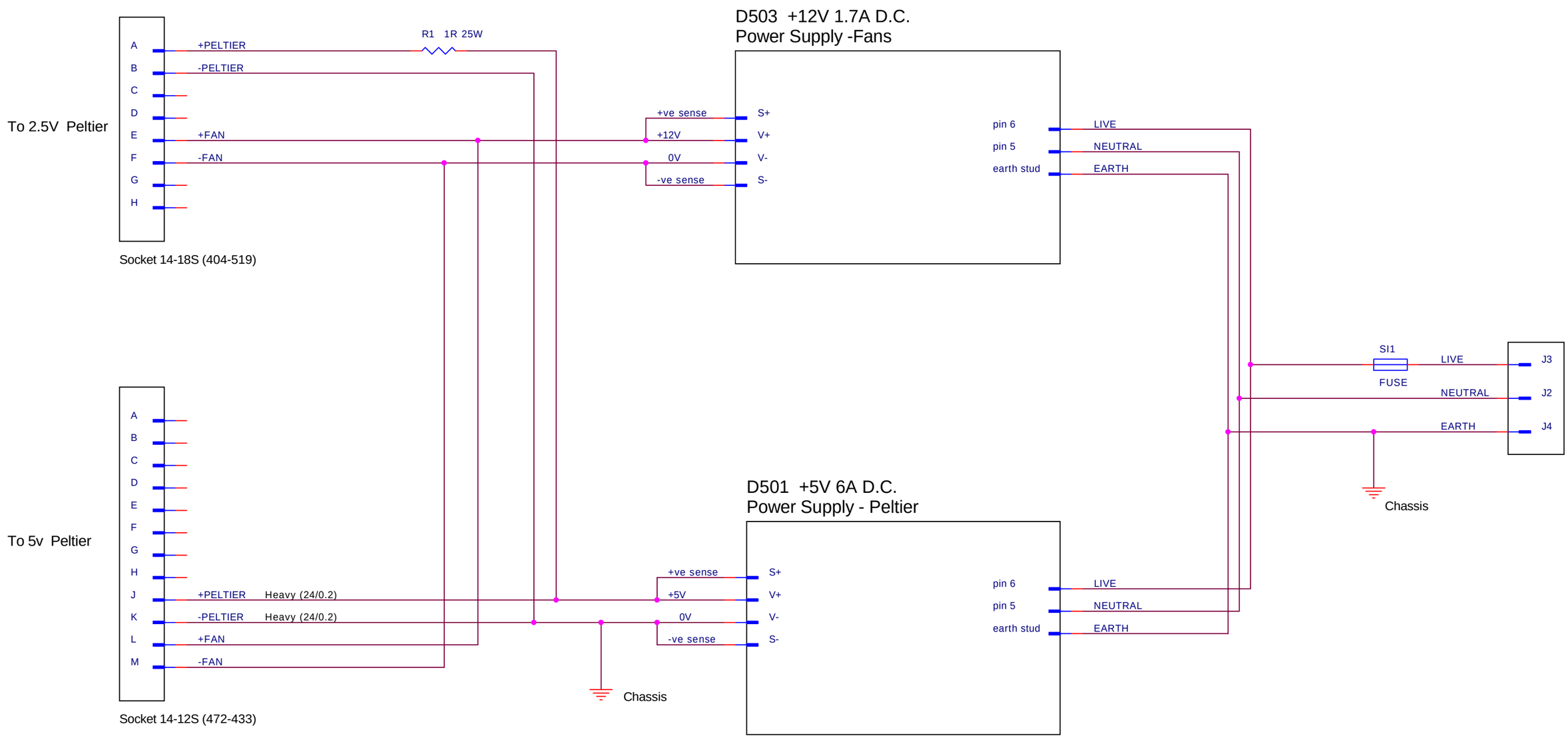

Title	**SDSU Autoguider Head Peltier/Fan PSU**	
Size B	Document Number **SDSUAuto07**	Rev
Date: Thursday, May 15, 2003	Sheet 1 of 1	